TDA2052

60W Hi-Fi AUDIO POWER AMPLIFIER WITH MUTE / STAND-BY

- SUPPLY VOLTAGE RANGE UP TO ±25V
- SPLIT SUPPLY OPERATION
- HIGH OUTPUT POWER (UP TO 60W MUSIC POWER)
- LOW DISTORTION
- MUTE/STAND-BY FUNCTION
- NO SWITCH ON/OFF NOISE
- AC SHORT CIRCUIT PROTECTION
- THERMAL SHUTDOWN
- ESD PROTECTION

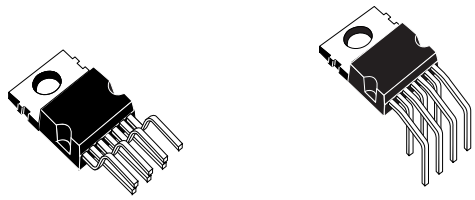

Heptawatt V **Heptawatt H**

ORDERING NUMBERS:

TDA2052V **TDA2052H**

DESCRIPTION

The TDA2052 is a monolithic integrated circuit in Heptawatt package, intended for use as audio class AB amplifier in TV or Hi-Fi field application. Thanks to the wide voltage range and to the high out current capability it's able to supply the highest power into both 4Ω and 8Ω loads even in presence of poor supply regulation.

The built in Muting/Stand-by function simplifies the remote operations avoiding also switching on-off noises.

TEST AND APPLICATION CIRCUIT

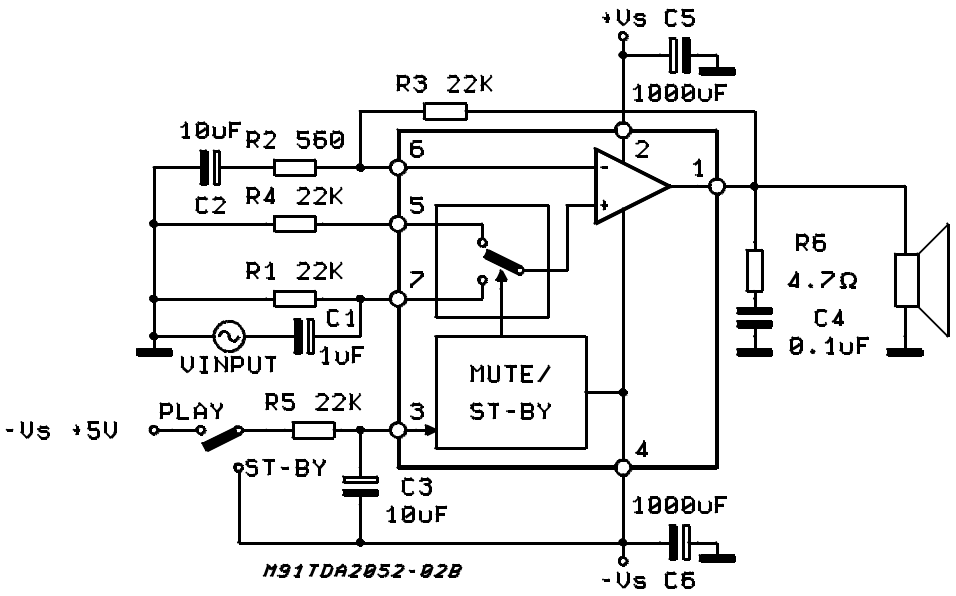

ABSOLUTE MAXIMUM RATINGS

Symbol	Parameter	Value	Unit
V_S	DC Supply Voltage	±25	V
I_O	Output Peak Current (internally limited)	6	A
P_{tot}	Power Dissipation T_{case} = 70°C	30	W
T_{op}	Operating Temperature Range	0 to +70	°C
T_{stg}, T_j	Storage and Junction Temperature	-40 to +150	°C

PIN CONNECTION (Top view)

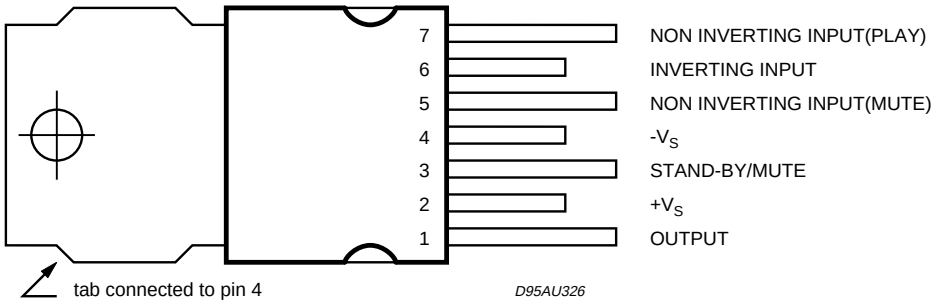

BLOCK DIAGRAM

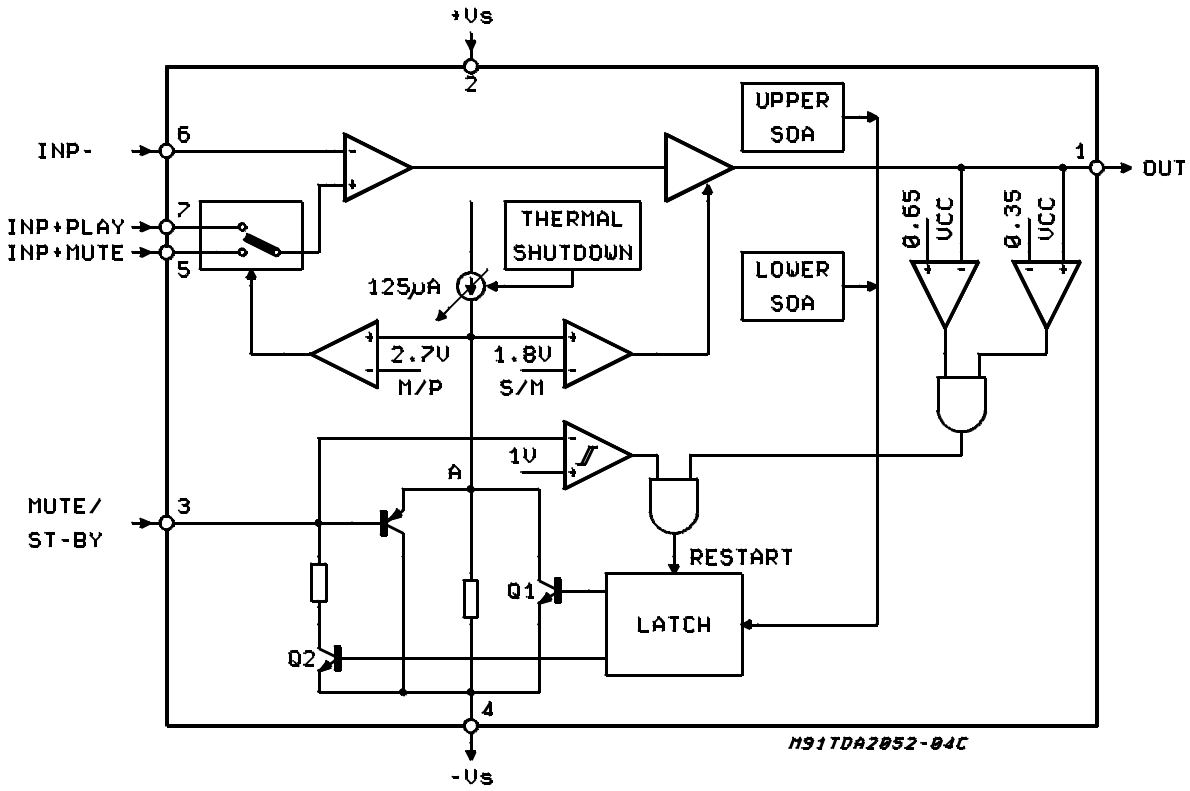

THERMAL DATA

Symbol	Description		Value	Unit
$R_{th\ j\text{-}case}$	Thermal Resistance Junction-case	Max	2.5	°C/W

ELECTRICAL CHARACTERISTICS (Refer to the test circuit, G_V = 32dB; V_S ± 18V; f = 1KHz; T_{amb} = 25°C, unless otherwise specified.)

Symbol	Parameter	Test Condition	Min.	Typ.	Max.	Unit
V_S	Supply Range		±6		±25	V
I_q	Total Quiescent Current	V_S = ±22V	20	40	70	mA
I_b	Input Bias Current				±0.5	µA
V_{OS}	Input Offset Voltage				±15	mV
I_{OS}	Input Offset Current				±200	nA
P_O	Music Output Power IEC268-3 Rules (*)	V_S = ± 22.5, R_L = 4Ω, d = 10%, t = 1s	50	60		W
P_O	Output Power (continuous RMS)	d = 10% RL = 4Ω R_L = 8Ω V_S = ±22V, R_L = 8Ω	35 30	40 22 33		W W W
		d = 1% R_L = 4Ω R_L = 8Ω V_S = ±22V, R_L = 8Ω		32 17 28		W W W
d	Total Harmonic Distortion	R_L = 4Ω P_O = 0.1 to 20W; f = 100Hz to 15KHz		0.1	0.7	%
		V_S ± 22V, R_L = 8Ω P_O = 0.1 to 20W; f = 100Hz to 15KHz		0.1	0.5	%
SR	Slew Rate		3	5		V/µs
G_V	Open Loop Voltage Gain			80		dB
e_N	Total Input Noise	A Curve f = 20Hz to 20KHz		2 3	 10	µV µV
R_i	Input Resistance		500			KΩ
SVR	Supply Voltage Rejection	f = 100Hz, V_{ripple} = 1V_{RMS}	40	50		dB
T_S	Thermal Shutdown			145		°C

MUTE/STAND-BY FUNCTION (Ref. –V_S)

$VT_{ST\text{-}BY}$	Stand-by - Threshold		1	1.8		V
VT_{PLAY}	Play Threshold			2.7	4	V
$I_{q\ ST\text{-}BY}$	Quiescent Current @ Stand-by	$V_{pin\ 3}$ = 0.5V		1	3	mA
$ATT_{ST\text{-}BY}$	Stand-by Attenuation		70	90		dB
I_{pin3}	Pin 3 Current @ Stand-by			–1	±10	µA

Note (*):
MUSIC POWER CONCEPT
MUSIC POWER is (according to the IEC clauses n.268-3 of Jan 83) the maximal power which the amplifier is capable of producing across the rated load resistance (regardless of non linearity) 1 sec after the application of a sinusoidal input signal of frequency 1KHz.

According to this definition our method of measurement comprises the following steps:
1) Set the voltage supply at the maximum operating value -10%
2) Apply a input signal in the form of a 1KHz tone burst of 1 sec duration; the repetition period of the signal pulses is > 60 sec
3) The output voltage is measured 1 sec from the start of the pulse
4) Increase the input voltage until the output signal show a THD = 10%
5) The music power is then V^2_{out}/R1, where V_{out} is the output voltage measured in the condition of point 4) and R1 is the rated load impedance

The target of this method is to avoid excessive dissipation in the amplifier.

APPLICATIONS SUGGESTIONS (See Test and Application Circuit)
The recommended values of the external components are those shown on the application circuit. Different values can be used; the following table can help the designer.

Comp.	Value	Purpose	Larger Than	Smaller Than
R1	22KΩ (*)	Input Impedance	Increase of Input Impedance	Decrease of Input Impedance
R2	560Ω	Closed Loop Gain set to 32dB (**)	Decrease of Gain	Increase of Gain
R3	22KΩ (*)		Increase of Gain	Decrease of Gain
R4	22KΩ (*)	Input Impedance @ Mute		
R5	22KΩ	Stand-by Time Constant		
R6	4.7Ω	Frequency Stability	Danger of oscillations	Danger of oscillations
C1	1µF	Input DC Decoupling		Higher Low-frequency cut-off
C2	10µF	Feedback DC Decoupling		Higher Low-frequency cut-off
C3	10µF	Stand-by Time Constant		
C4	0.100µF	Frequency Stability		Danger of Oscillations
C5, C6	1000µF	Supply Voltage Bypass		

(*) R1 = R3 = R4 for POP optimization

(**) Closed Loop Gain has to be ≥ 30dB

TYPICAL CHARACTERISTICS

Figure 1: Output Power vs. Supply Voltage

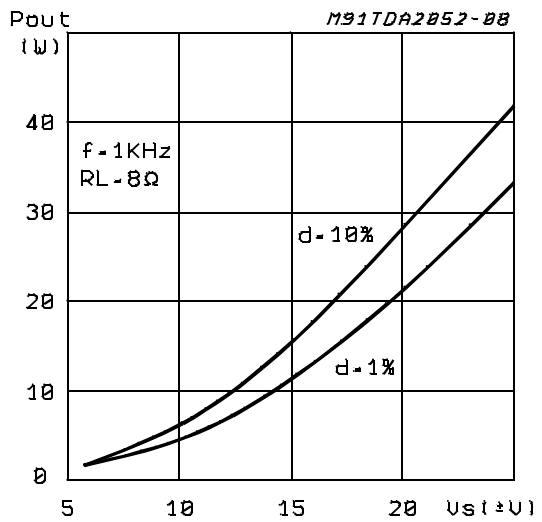

Figure 2: Distortion vs. Output Power

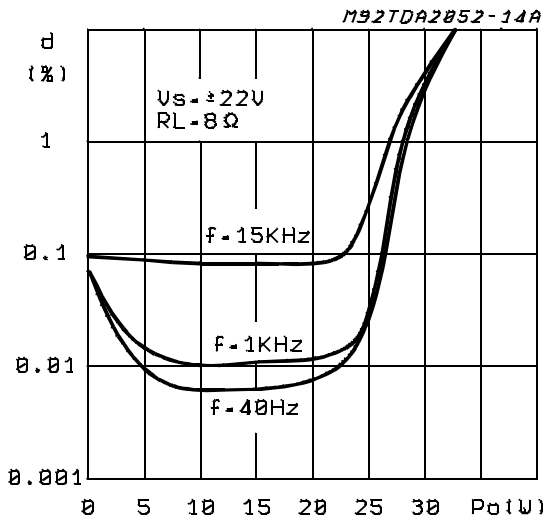

Figure 3: Output Power vs. Supply Voltage.

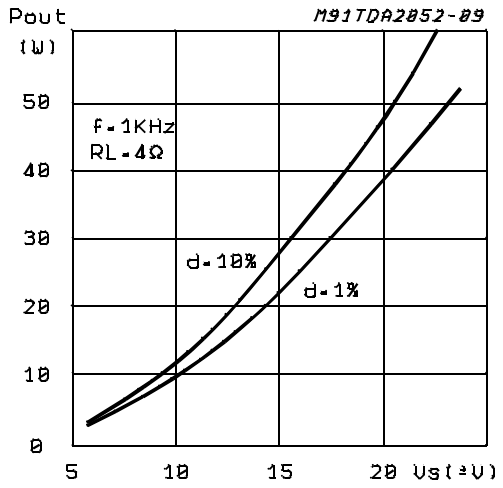

Figure 4: Distortion vs. Output Power.

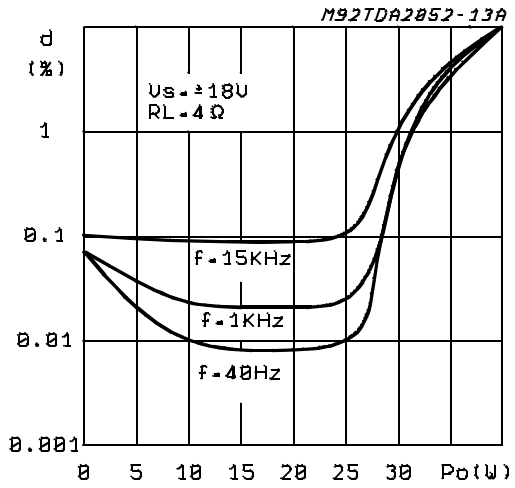

Figure 5: Distortion vs. Frequency.

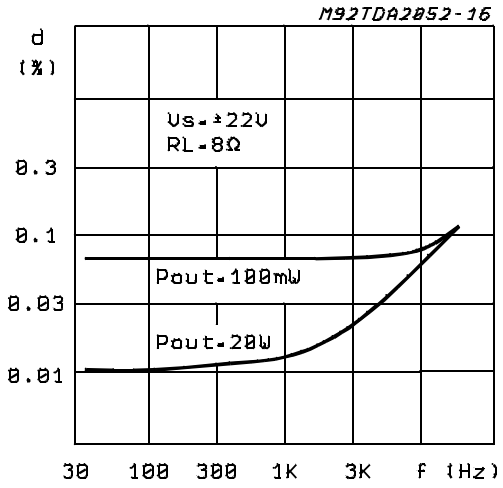

Figure 6: Distortion vs. Frequency.

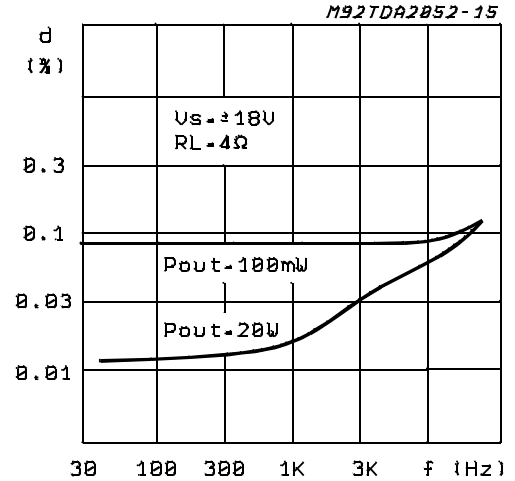

Figure 7: Quiescent Current vs. Supply Voltage

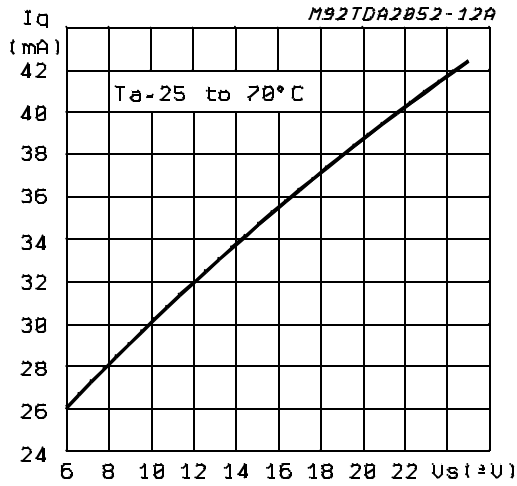

Figure 8: Supply Voltage Rejection vs. Frequency.

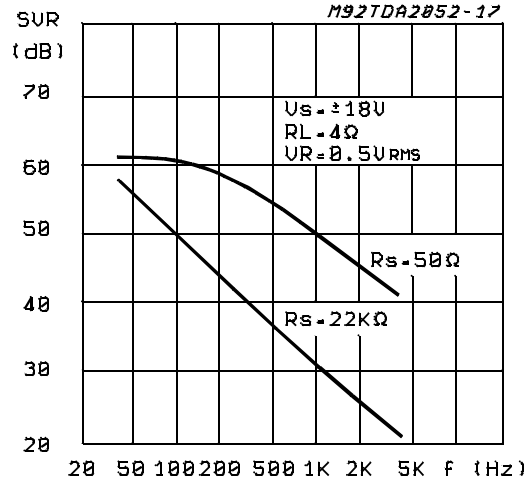

Figure 9: Bandwidth.

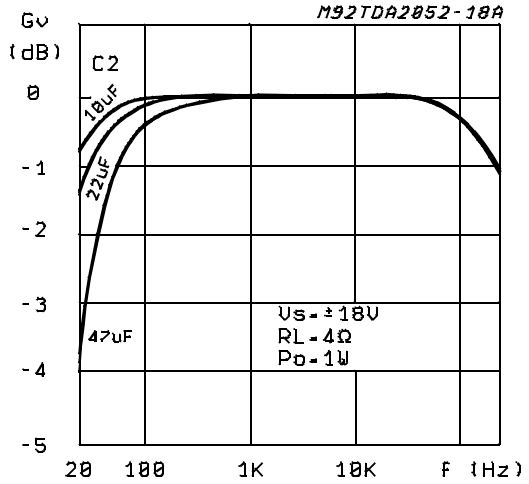

Figure 10: Output Attenuation & Quiescent Current vs. V_{pin3}.

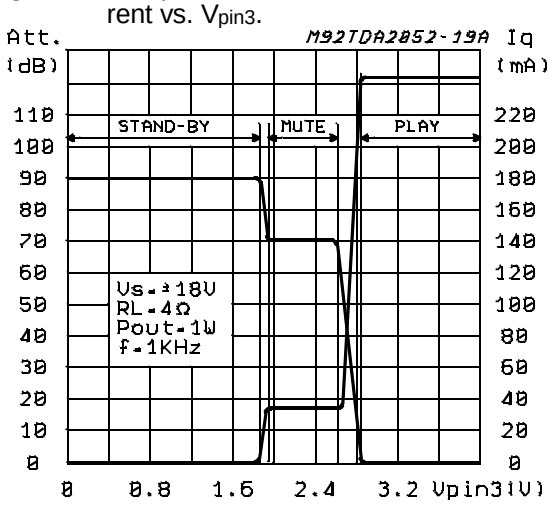

Figure 11: Total Power Dissipation & Efficiency vs. Output Power.

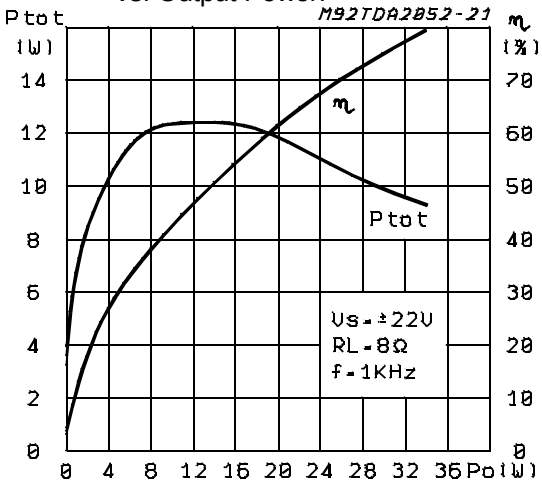

Figure 12: Total Power Dissipation & Efficiency vs. Output Power.

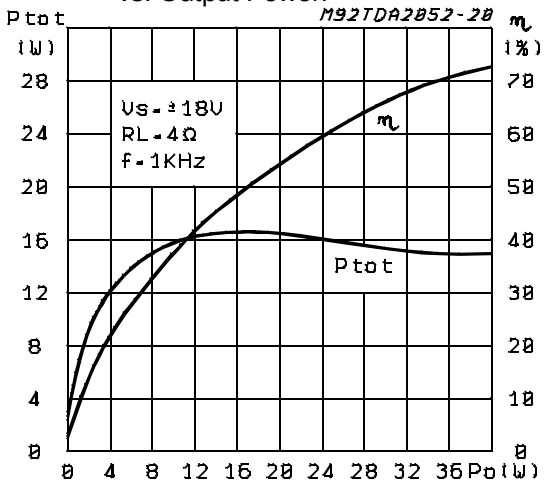

Figure 13: P.C. Board and Components Layout of the Circuit of Fig. 14 (1:1 scale)

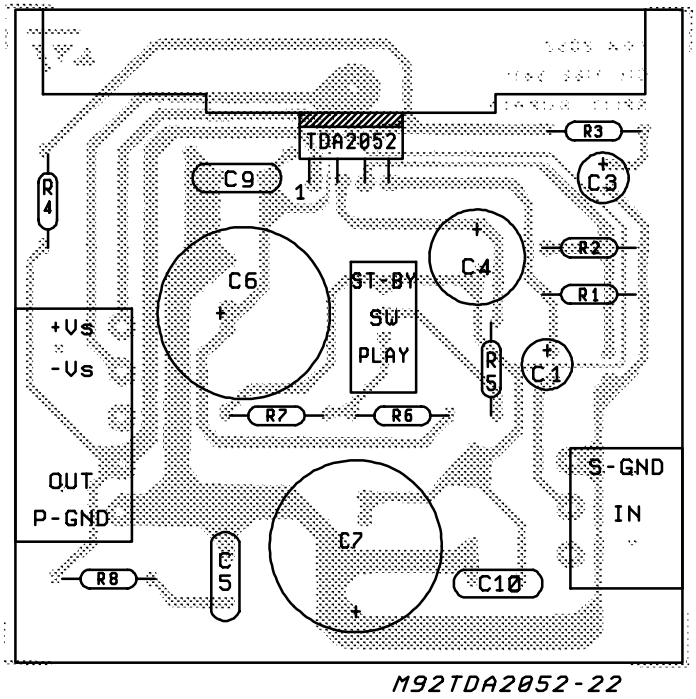

Figure 14: Demo Board Schematic.

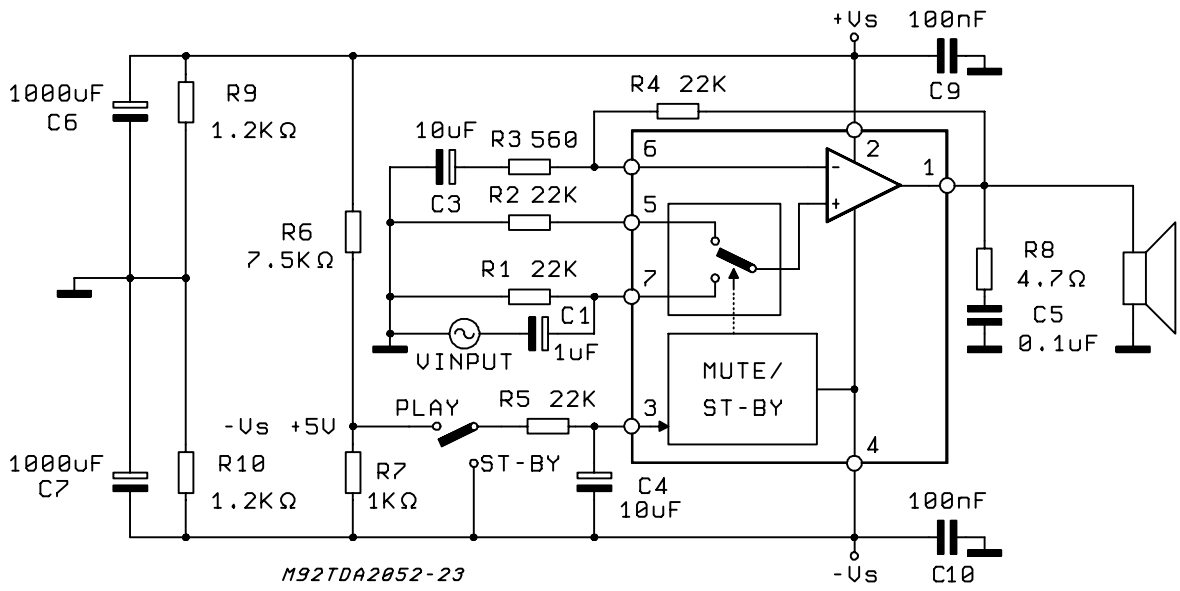

MUTE/STAND-BY FUNCTION

The pin 3 (MUTE/STAND-BY) controls the amplifier status by three different thresholds, referred to -Vs.

When its voltage is lower than the first threshold (1V, with a ±70mV hysteresis), the amplifier is in STAND-BY and all the final stage current generators are off. Only the input MUTE stage is on in order to prevent pop-on problems.

At V_{pin3}=1.8V the final stage current generators are switched on and the amplifier operates in MUTE.

For V_{pin3} =2.7V the amplifier is definitely on (PLAY condition)

Figure 15.

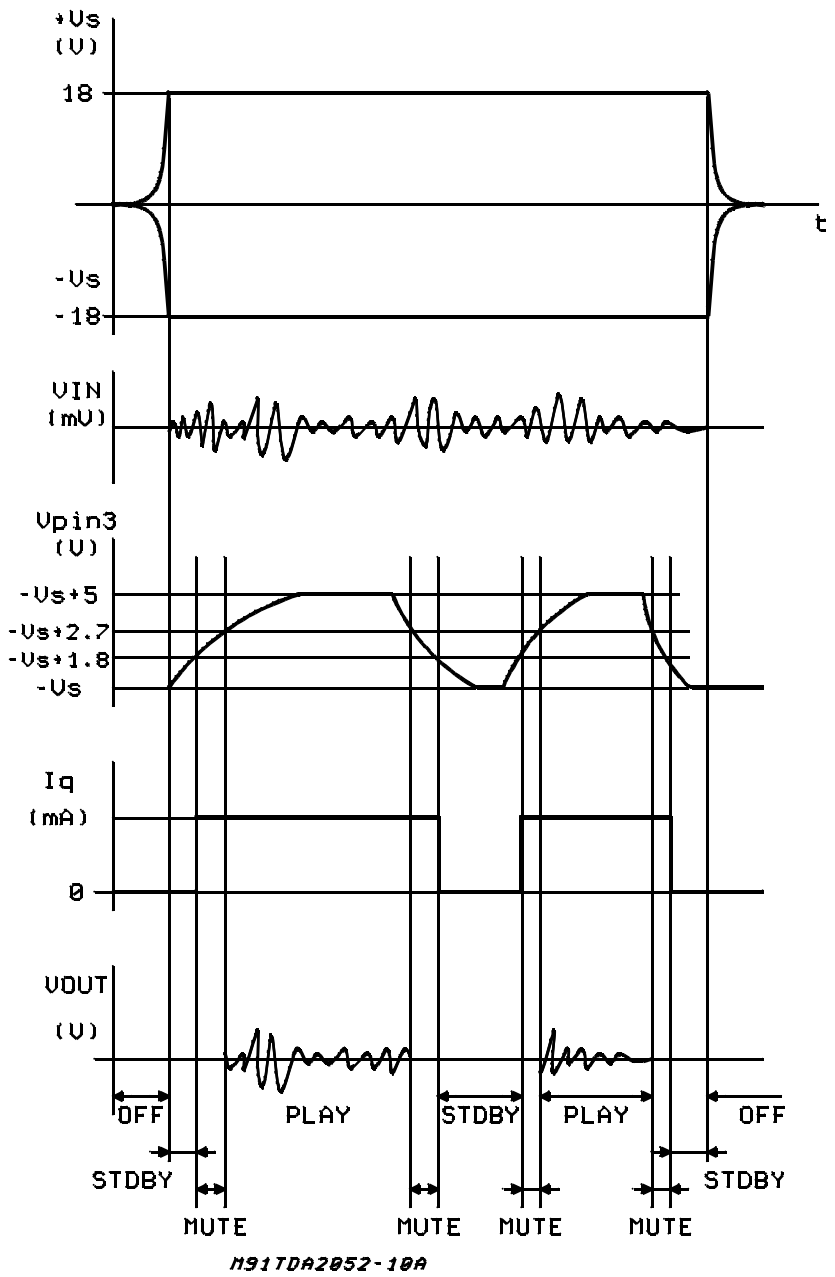

SHORT-CIRCUIT PROTECTION

The TDA 2052 has an original circuit which protects the device during accidental short-circuit between output and GND / -Vs / +Vs, taking it in STAND-BY mode, so limiting also dangerous DC current flowing throught the loudspeaker.

If a short-circuit or an overload dangerous for the final transistors are detected, the concerned SOA circuit sends out a signal to the latching circuit (with a 10µs delay time that prevents fast random spikes from inadvertently shutting the amplifier off) which makes Q_1 and Q_2 saturate (see Block Diagram). Q_1 immediately short-circuits to ground the A point turning the final stage off while Q_2 short-circuits to ground the external capacitor driving the pin 3 (Mute/Stand-by) towards zero potential.

Only when the pin 3 voltage becomes lower than 1V, the latching circuit is allowed to reset itself and restart the amplifier, provided that the short-circuit condition has been removed. In fact, a window comparator is present at the output and it is aimed at preventing the amplifier from restarting if the output voltage is lower than 0.35 Total Supply Voltage or higher than 0.65 Total Supply Voltage. If the output voltage lies between these two thresholds, one may reasonably suppose the short-circuit has been removed and the amplifier may start operating again.

The PLAY/MUTE/STAND-BY function pin (pin 3) is both ground- and positive supply-compatible and can be interfaced by means of the R_5, C_3 net either to a TTL or CMOS output (µ-Processor) or to a specific application circuit.

The R_5, C_3 net is fundamental, because connecting this pin directly to a low output impedance driver such as TTL gate would prevent the correct operation during a short-circuit. Actually a final stage overload turns on the protection latching circuit that makes Q_2 try to drive the pin 3 voltage under 0.8 V. Since the maximum current this pin can stand is 3 mA, one must make sure the following condition is met:

$$R_5 \geq \frac{(V_A - 0.7V)}{3mA}$$

that yields: $R_{5,\,min} = 1.5\ K\Omega$ with V_A=5V.

In order to prevent pop-on and -off transients, it is advisable to calculate the C_3, R_5 net in such a way that the STAND-BY/MUTE and MUTE/PLAY threshold crossing slope (positive at the turn-on and vice-versa) is less than 100 V/sec.

THERMAL PROTECTION

The thermal protection operates on the 125µA current generator, linearly decreasing its value from 90°C on. By doing this, the A voltage slowly decreases thus switching the amplifier first to MUTE (at 145°C) and then to STAND-BY (155°C).

Figure 16: Thermal Protection Block Diagram

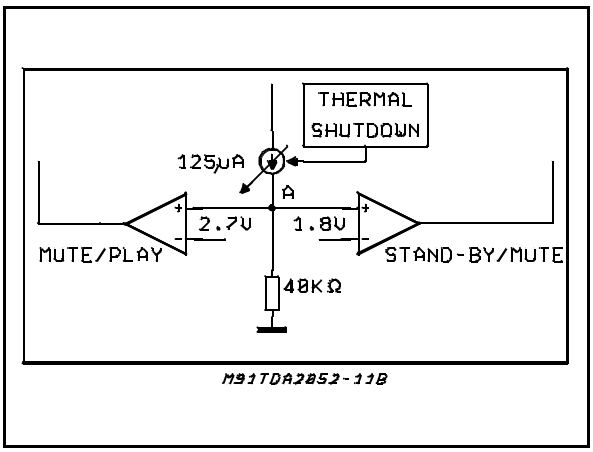

The maximum allowable power dissipation depends on the size of the external heatsink (thermal resistance case-ambient); figure 17 shows the dissipable power as a function of ambient temperature for different thermal resistance.

Figure 17: Maximum Allowable Power Dissipation vs. Ambient Temperature.

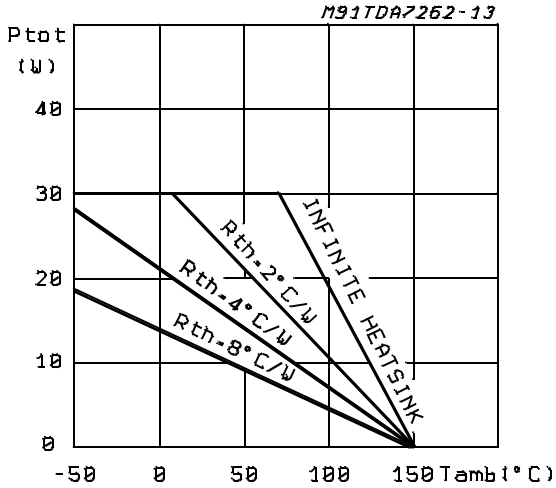

APPLICATION NOTES

90W MULTIWAY SPEAKER SYSTEM

The schematic diagram of figure 18, shows the solution that we have closen as a suggestion for Hi-Fi and especially TV applications.

The multiway system provides the separation of the musical signal not only for the loudspeakers, but also for the power amplifiers with the following advantages:

- reduced power level required of each individual amplifier
- complete separation of the ways (if an amplifier is affected by clipping distortion, the others are not)
- protection of tweeters (the high power harmonics generated by low frequency clipping can not damage the delicate tweeters that are driven by independent power amplifier)
- high power dedicated to low frequencies

Figure 18: Multiway Application Circuit

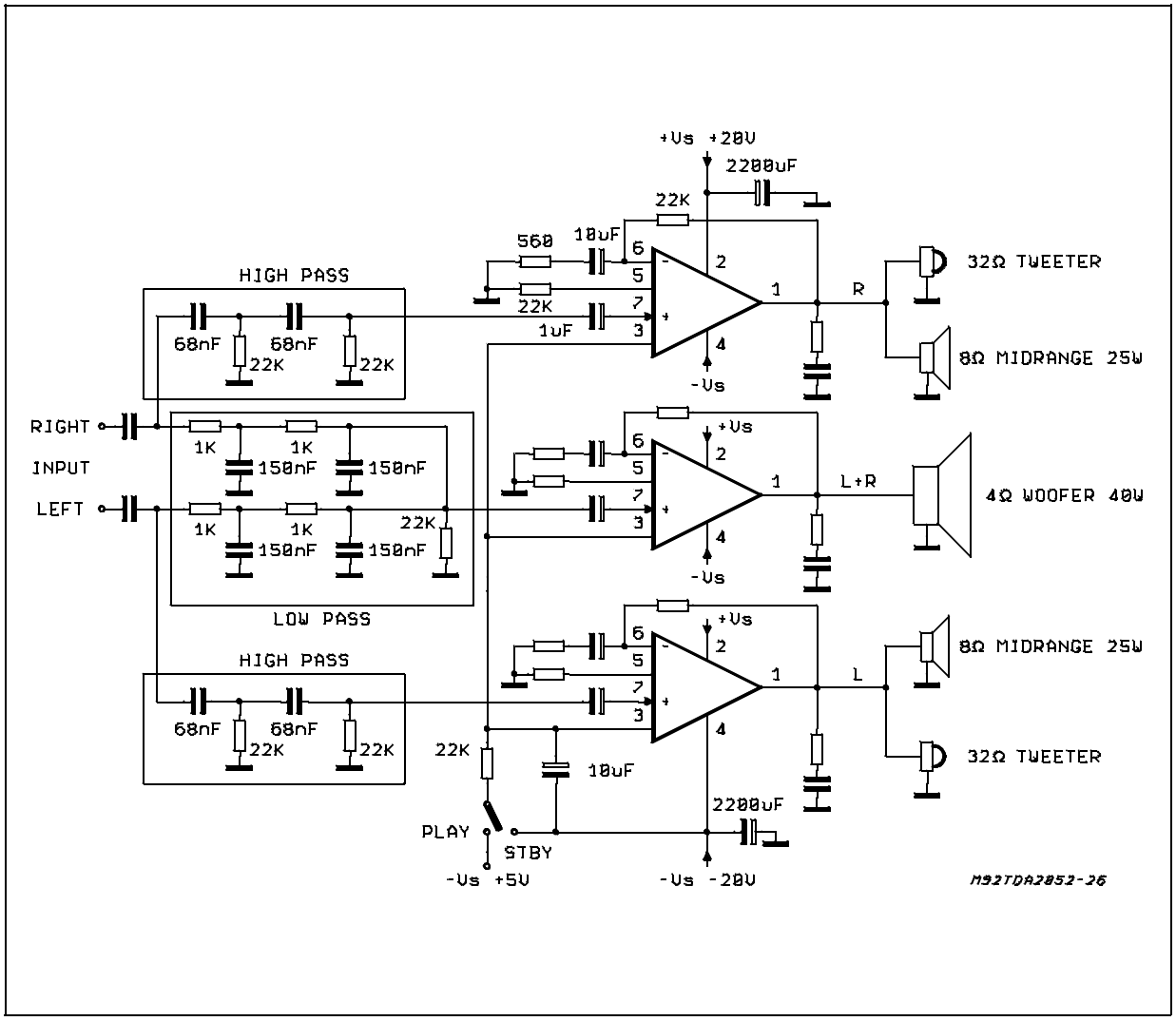

As shown in Figure 19, the R-C passive network for low-pass and High-pass give a cut with a slope of 12dB/octave
A further advantage of this application is that connecting each speaker direcly to its amplifier, the musical signal is not modified by the variations of the impedance of the crossover over frequency.

The subwoofer is designed for obtaining high sound pressure level with low distortion without stereo effect.

In the application of figure 18, the subwoofer plays the 20 to 300 Hz frequency range, while the remaining 300 Hz to 20KHz are sent to two separate channels with stereo effect.

The multiway system makes use of three TDA2052, one for driving the subwoofer with POUT higher than 40W (THD = 10%), 28W undistorted (THD = 0.01%), while the others two TDA2052 are used for driving the mid/high frequency speakers of L/R channels, delivering POUT = 25W (THD = 10%) and 20W @ THD = 0.01%

Figure 19: Frequency Response

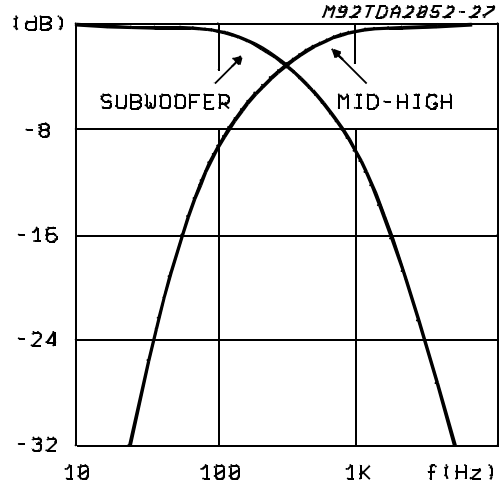

Figure 20: Distortion vs Output Power (Subwoofer)

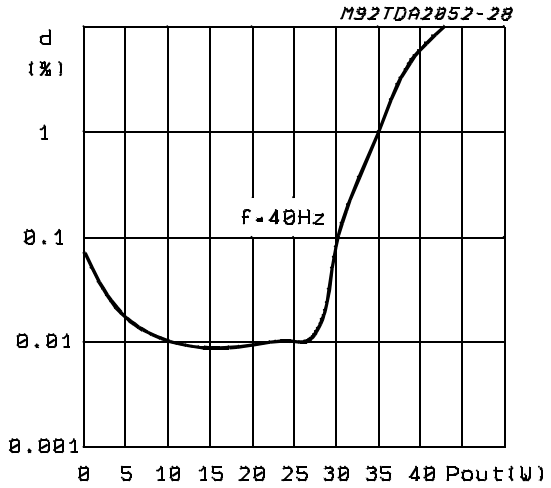

Figure 21: Distortion vs Output Power (Midrange/Tweeter)

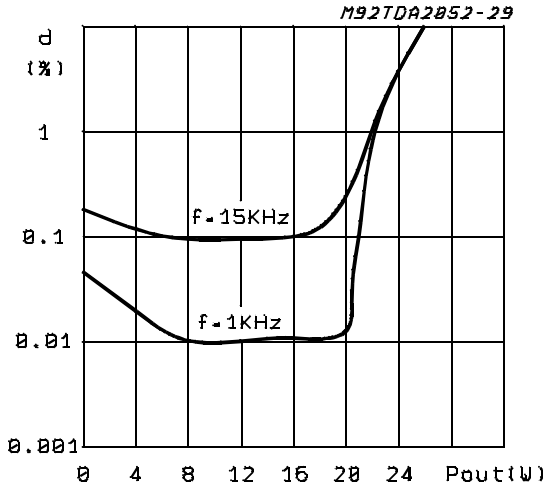

DIM.	mm			inch		
	MIN.	TYP.	MAX.	MIN.	TYP.	MAX.
A			4.8			0.189
C			1.37			0.054
D	2.4		2.8	0.094		0.110
D1	1.2		1.35	0.047		0.053
E	0.35		0.55	0.014		0.022
E1	0.7		0.97	0.028		0.038
F	0.6		0.8	0.024		0.031
G	2.34	2.54	2.74	0.095	0.100	0.105
G1	4.88	5.08	5.28	0.193	0.200	0.205
G2	7.42	7.62	7.82	0.295	0.300	0.307
H2			10.4			0.409
H3	10.05		10.4	0.396		0.409
L	16.7	16.9	17.1	0.657	0.668	0.673
L1		14.92			0.587	
L2	21.24	21.54	21.84	0.386	0.848	0.860
L3	22.27	22.52	22.77	0.877	0.891	0.896
L4			1.29			0.051
L5	2.6	2.8	3	0.102	0.110	0.118
L6	15.1	15.5	15.8	0.594	0.610	0.622
L7	6	6.35	6.6	0.236	0.250	0.260
L9		0.2			0.008	
L10	2.1		2.7	0.082		0.106
L11	4.3		4.8	0.169		0.190
M	2.55	2.8	3.05	0.100	0.110	0.120
M1	4.83	5.08	5.33	0.190	0.200	0.210
V4	40 (typ.)					
Dia	3.65		3.85	0.144		0.152

OUTLINE AND MECHANICAL DATA

Weight: 1.90gr

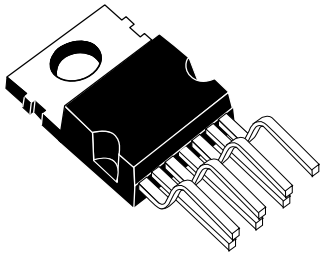

Heptawatt V

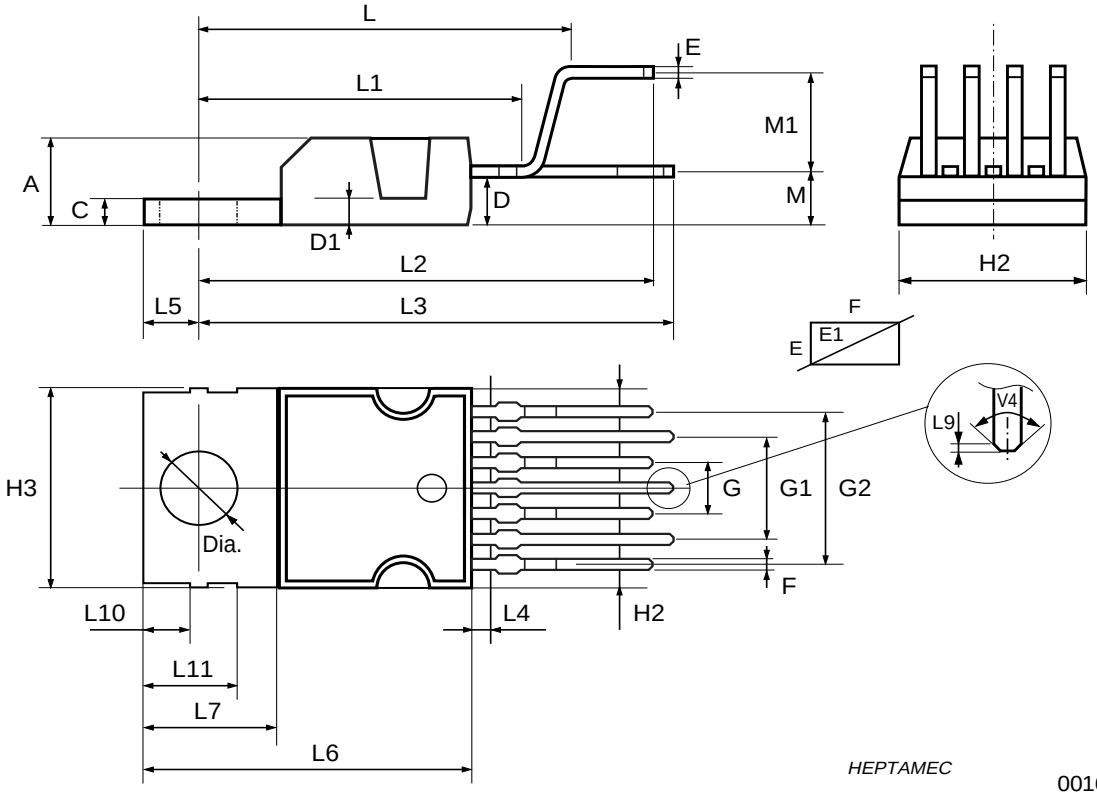

DIM.	mm			inch		
	MIN.	TYP.	MAX.	MIN.	TYP.	MAX.
A			4.80			0.188
C			1.37			0.054
D	2.40		2.80	0.094		0.11
D1	1.20		1.35	0.047		0.053
E	0.35		0.55	0.014		0.022
E1	0.70		0.97	0.03		0.036
F	0.60		0.80	0.024		0.031
G	2.34	2.54	2.74	0.092	0.1	0.108
G1	4.88	5.08	5.28	0.192	0.2	0.208
G2	7.42	7.62	7.8	0.292	0.3	0.307
H2			10.40			0.41
H3	10.05		10.40	0.395		0.409
L1	3.90	4.20	4.50	0.153	0.165	0.177
L2	18.10	18.40	18.70	0.712	0.724	0.736
L3	4.88	5.08	5.28	0.192	0.2	0.208
L4			1.29			0.05
L5	2.60		3.00	0.102		0.118
L6	15.10		15.80	0.594		0.622
L7	6.00		6.60	0.236		0.260
L9	3.9	4.2	4.5	0.153	0.165	0.177
L10	2.10		2.70	0.083		0.106
L13	4.30		4.80	0.169		0.189
V5	89˚ (Min.), 90˚ (Typ.), 91˚ (Max.)					
DIA	3.65		3.85	0.143		0.151

OUTLINE AND MECHANICAL DATA

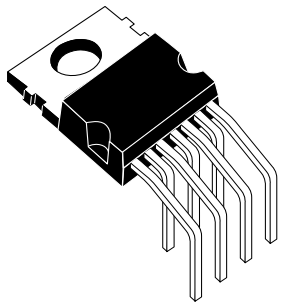

Heptawatt H

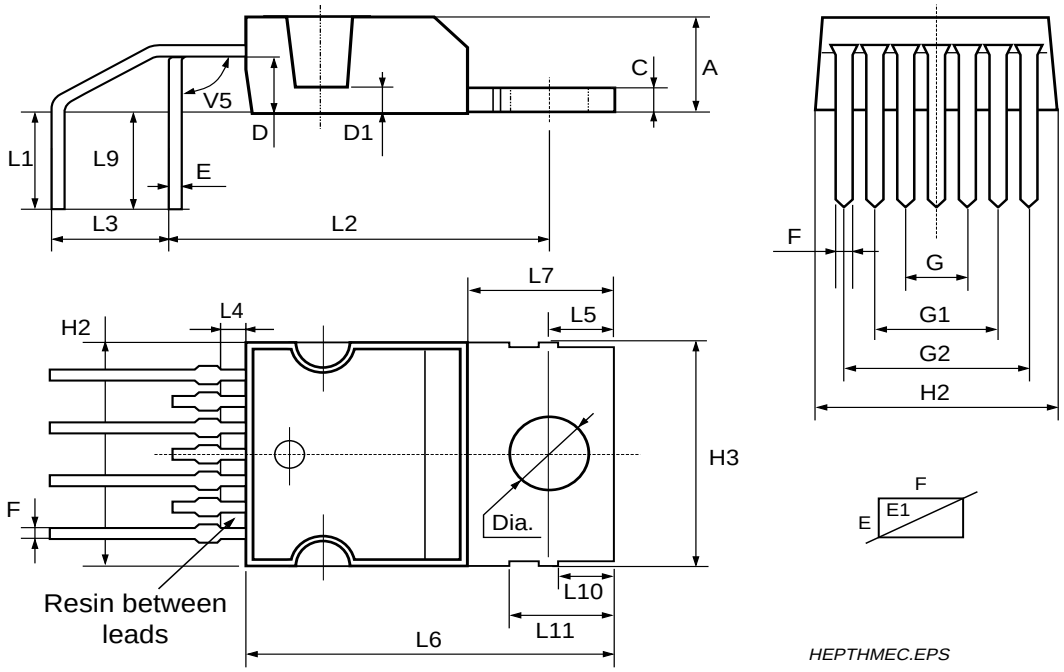

0080180

Information furnished is believed to be accurate and reliable. However, STMicroelectronics assumes no responsibility for the consequences of use of such information nor for any infringement of patents or other rights of third parties which may result from its use. No license is granted by implication or otherwise under any patent or patent rights of STMicroelectronics. Specification mentioned in this publication are subject to change without notice. This publication supersedes and replaces all information previously supplied. STMicroelectronics products are not authorized for use as critical components in life support devices or systems without express written approval of STMicroelectronics.

The ST logo is a registered trademark of STMicroelectronics

© 2003 STMicroelectronics – Printed in Italy – All Rights Reserved

STMicroelectronics GROUP OF COMPANIES

Australia - Brazil - Canada - China - Finland - France - Germany - Hong Kong - India - Israel - Italy - Japan - Malaysia - Malta - Morocco - Singapore - Spain - Sweden - Switzerland - United Kingdom - United States.

http://www.st.com